REV.	DESCRIPTION	DATE	BY

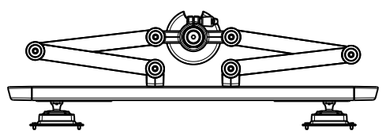

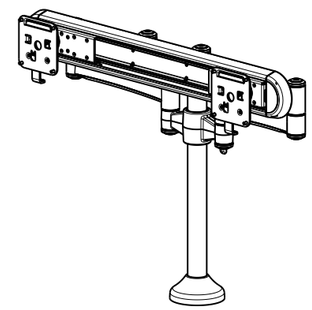

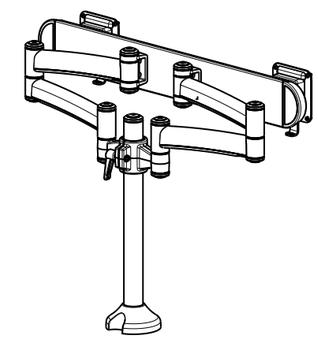

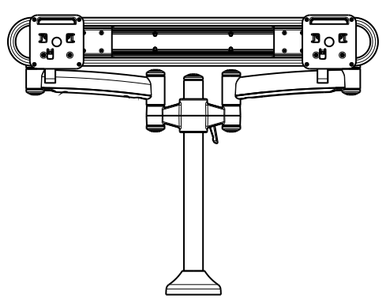

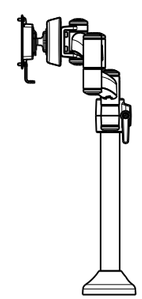

TOLERANCES UNLESS NOTED
mm [INCHES]
.XX = ±.10 .XXX = ±.005
.X = ±.25 .XX = ±.010
ANGLES = ±1°

Humanscale
11 East 26th Street, NYC, NY 10010
TEL: 212 725 4749, FAX: 212 725 7545

MATERIAL

WEIGHT
g

DRAWN BY MV

DATE 12/28/06

DO NOT SCALE DRAWING

PROJECT
M7 Price Guide

TITLE
Folding Links in Context w Double Crossbar

SHEET 1 OF 2

SCALE 1:10

DRAWING NO. B

PROPRIETARY AND CONFIDENTIAL
THE INFORMATION CONTAINED IN THIS DRAWING IS THE SOLE PROPERTY OF HUMANSCALE. ANY REPRODUCTION OR DISTRIBUTION IN PART OR AS A HOLE WITHOUT THE WRITTEN PERMISSION OF HUMANSCALE IS PROHIBITED.

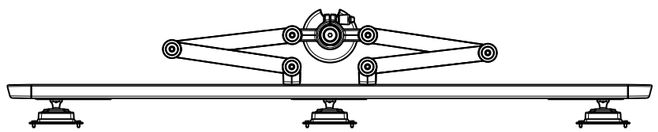

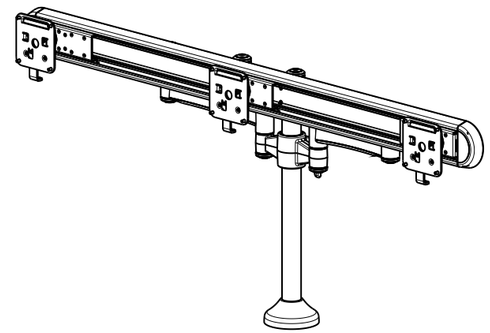

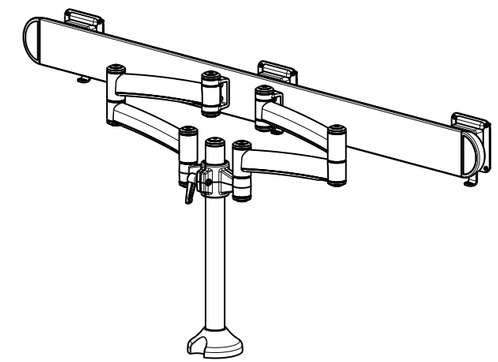

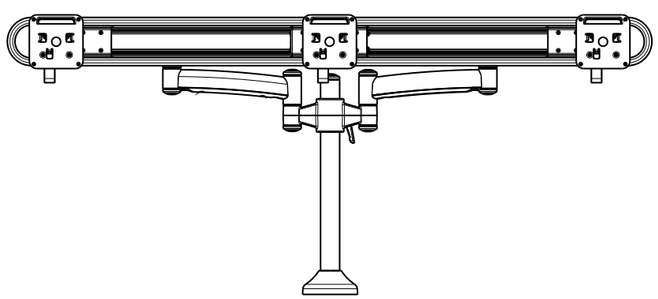

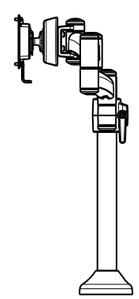

TOLERANCES UNLESS NOTED mm [INCHES] .XX = ±.10 .XXX = ±.005 .X = ±.25 .XX = ±.010 ANGLES = ±1°	**Humanscale** 11 East 26th Street, NYC, NY 10010 TEL: 212 725 4749, FAX: 212 725 7545			
MATERIAL	PROJECT M7 Price Guide			
WEIGHT g	TITLE Folding Links in Context w Triple Crossbar			
DRAWN BY MV / DATE 12/28/06				
DO NOT SCALE DRAWING	SHEET 2 OF 2	SCALE 1:10	DRAWING NO.	B

PROPRIETARY AND CONFIDENTIAL
THE INFORMATION CONTAINED IN THIS DRAWING IS THE SOLE PROPERTY OF HUMANSCALE. ANY REPRODUCTION OR DISTRIBUTION IN PART OR AS A HOLE WITHOUT THE WRITTEN PERMISSION OF HUMANSCALE IS PROHIBITED.